MOD	DATE	DRND.	APPD.	DESCRIPTION

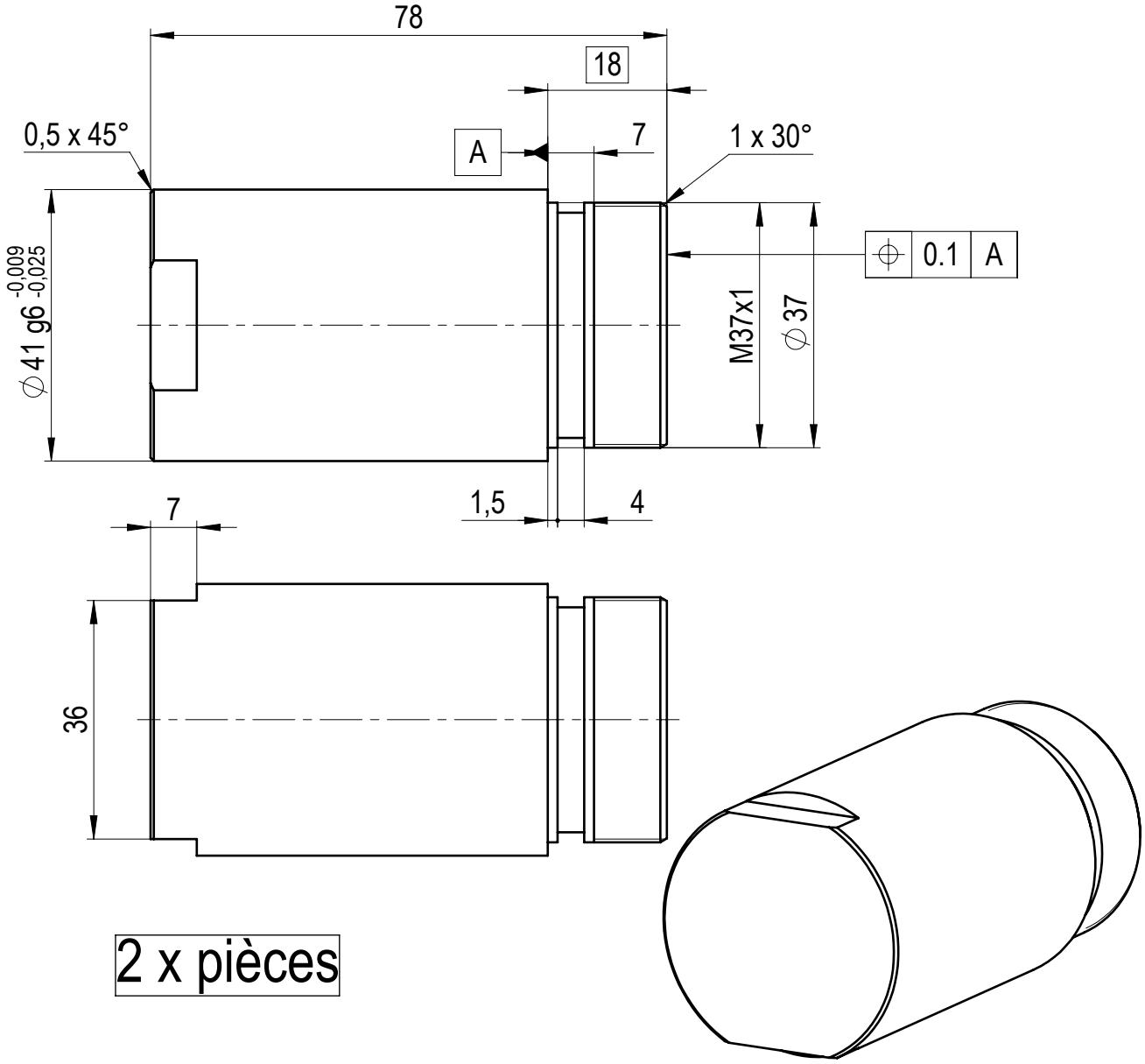

DESCRIPTION / REMARKS	MATERIAL	TREATMENT	W.(Kg)
	Inox 304L ou Alu 7075		

SCALE: 1/1

0mm 100

	NAME	DATE
DRN.		
CKD.		
APPD.		

GEN. TOL. :

GEN. SURFACE FINISH :

REHAUSSE

A4

SolidWorks