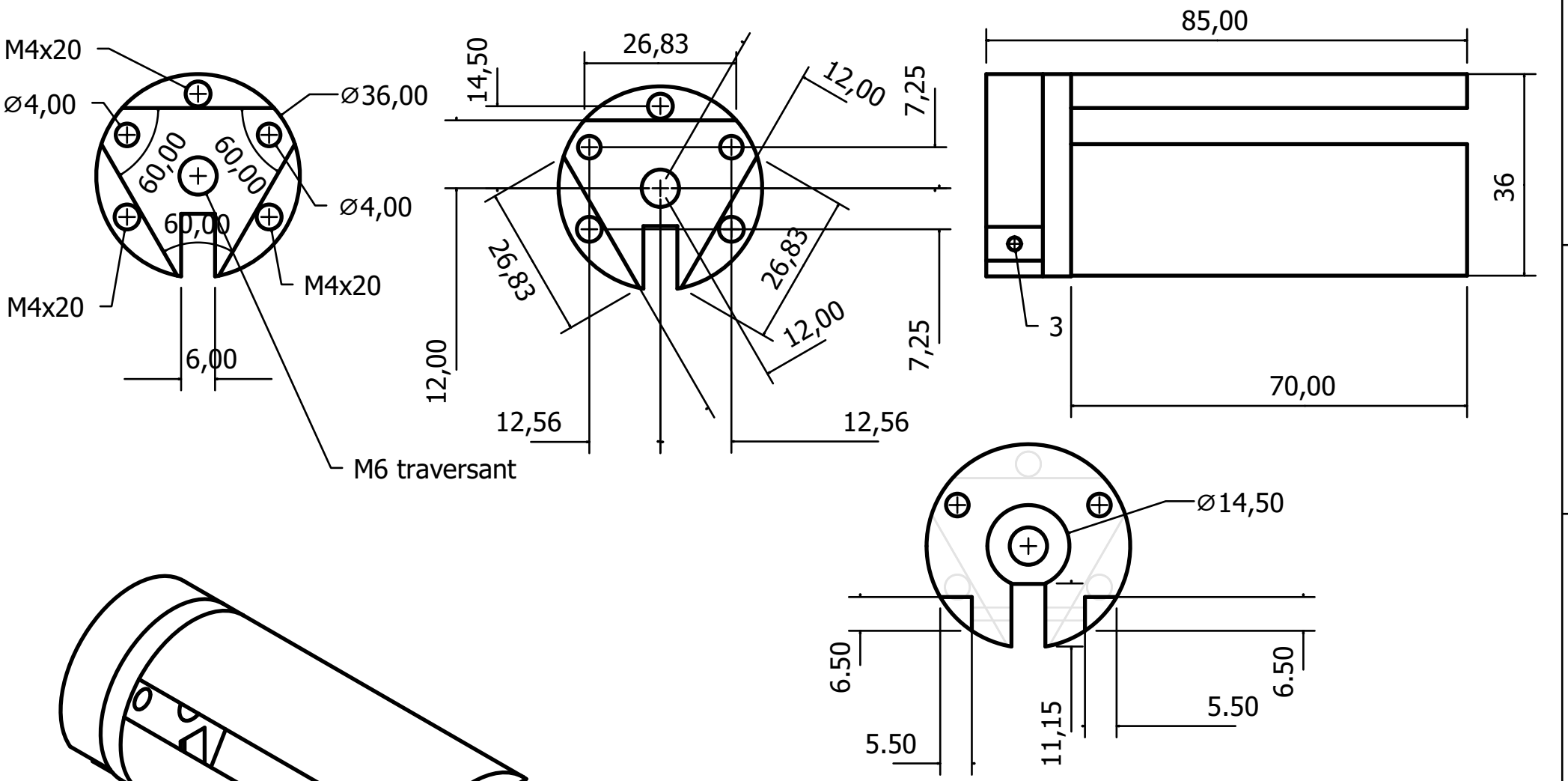

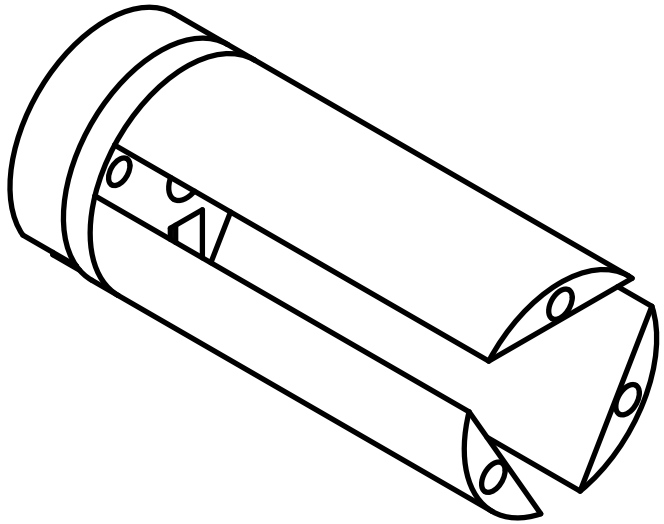

DESIGNED BY: FAIVRE romaric DATE: 30/11/2020		support détente acier inoxydable	
SIZE A4			
SCALE 1/1	WEIGHT (kg) Weight	DRAWING NUMBER 1	SHEET 1

This drawing is our property; it can't be reproduced or communicated without our written consent.