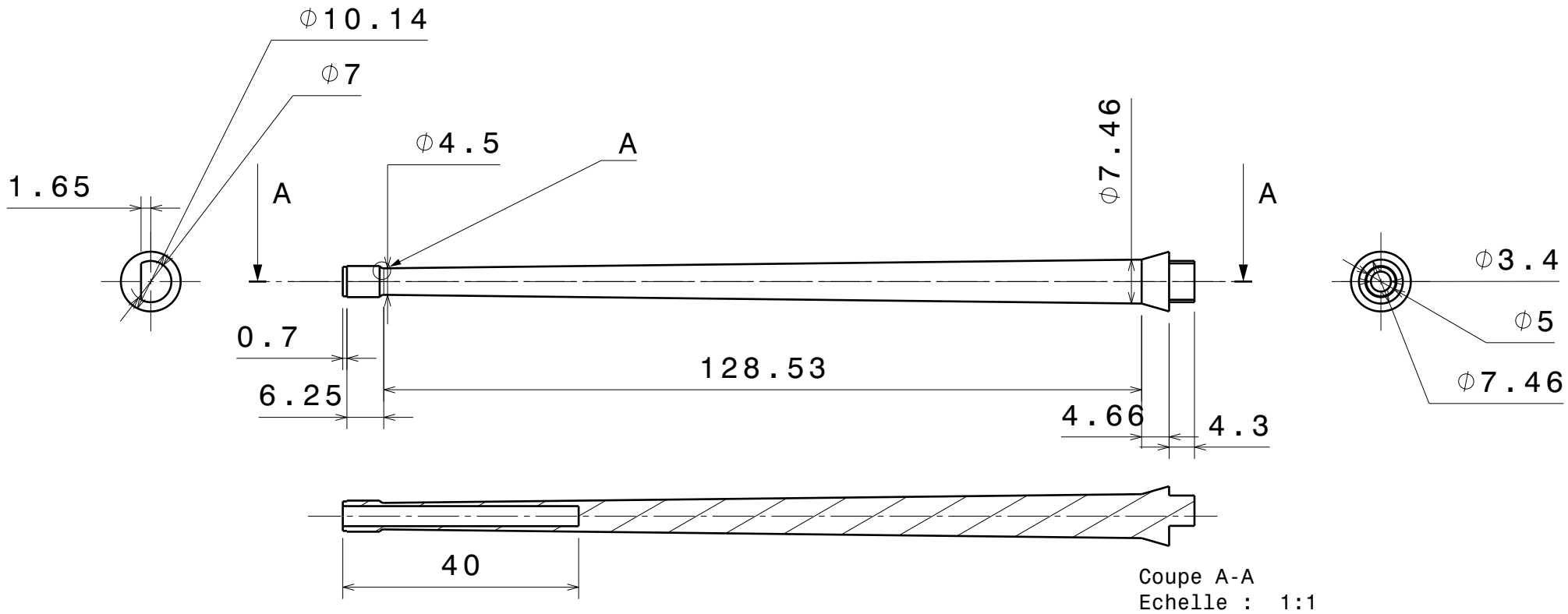

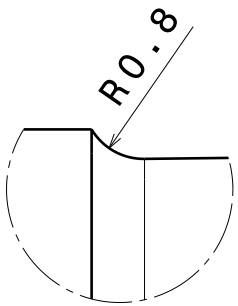

Détail A
Echelle : 10:1

DESIGNED BY: Kevin DATE: 30/11/2020	Canon 105mm T5E5 pour T-29 1/35		
CHECKED BY: XXX DATE: XXX			
SIZE A4	DASSAULT SYSTEMES		
SCALE 1:1 / WEIGHT (kg) 0.011Kg	DRAWING NUMBER AFPA Champs-sur-Marne	SHEET 1/1	

This drawing is our property; it can't be reproduced or communicated without our written agreement.

I	_
H	_
G	_
F	_
E	_
D	_
C	_
B	_
A	_