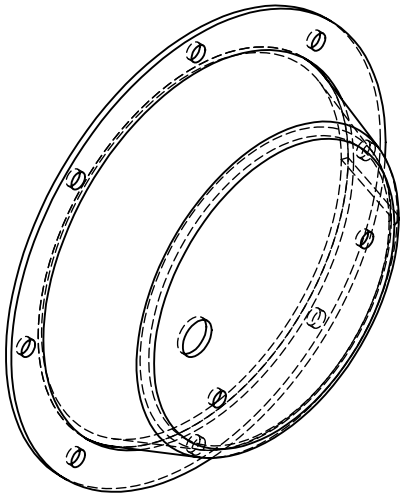

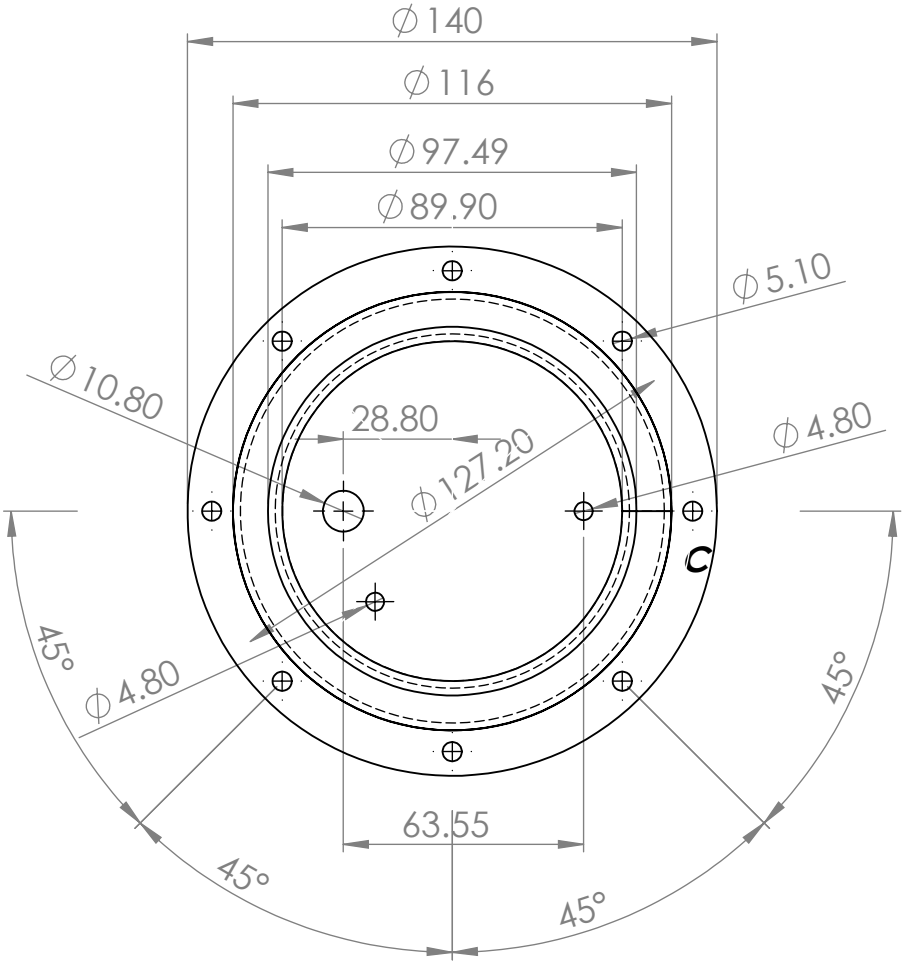
∅140
∅116
∅97.49
∅89.90
∅5.10
∅10.80
28.80
∅4.80
∅127.20
C
45°
∅4.80
45°
63.55
45°
45°

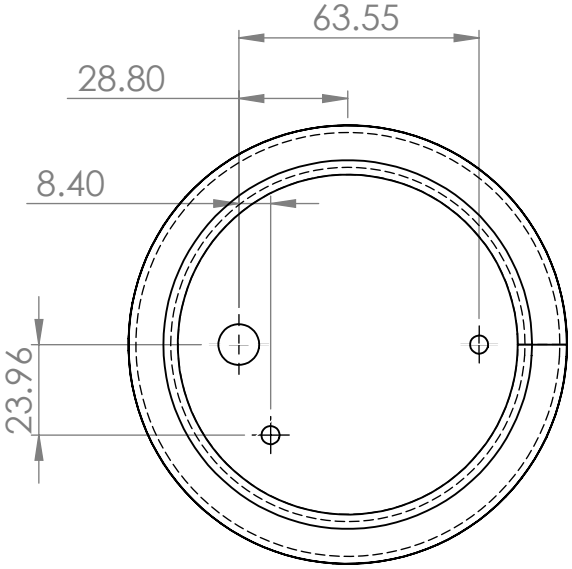
63.55
28.80
8.40
23.96

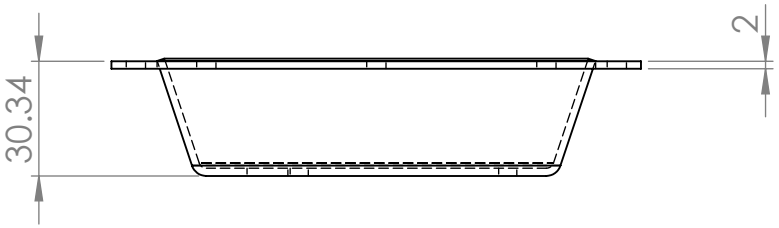
2
30.34

DÉTAIL C