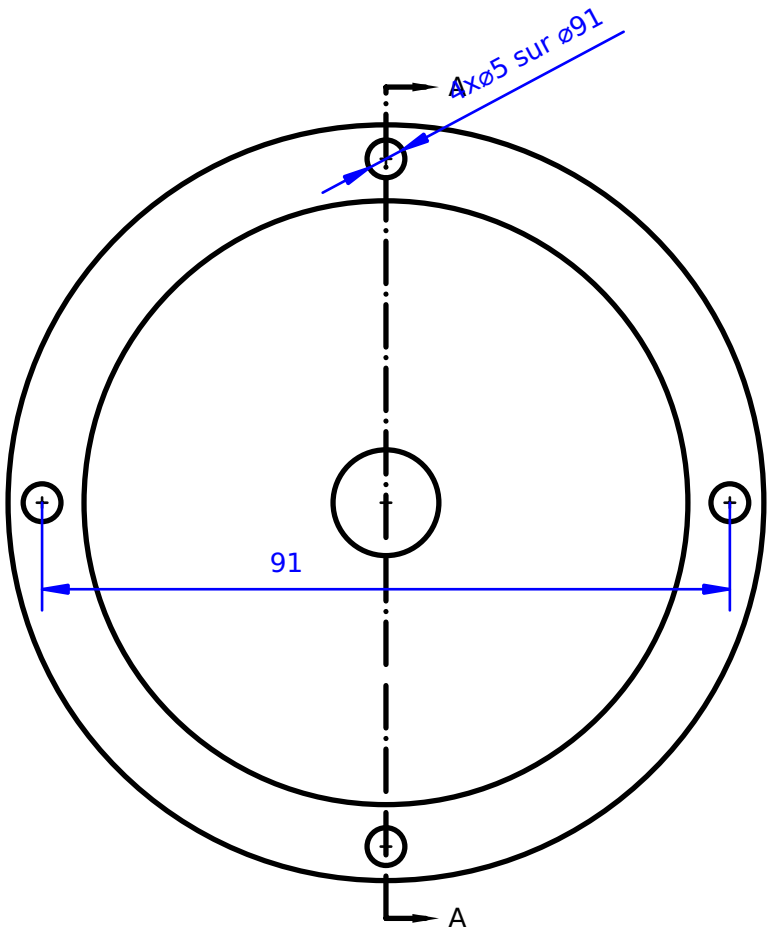

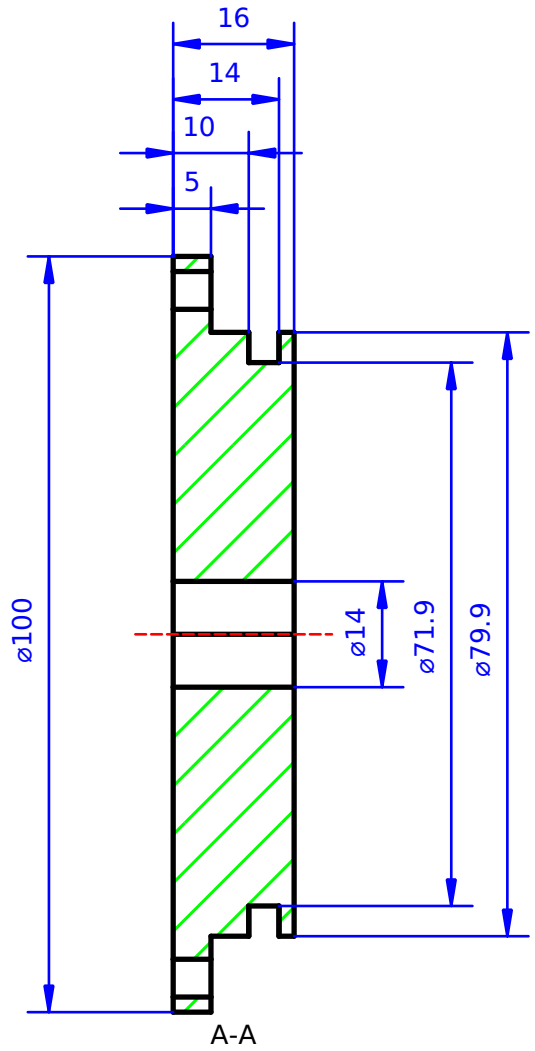

DESIGNED BY: Fabien HUDEBINE DATE: 20/04/2020		Dépileur Doseur Plaque embout cylindre	
SIZE A4		Matière: Inox316 Quantité: 1	
SCALE Scale	WEIGHT (kg) Weight	DRAWING NUMBER Drawing number	SHEET Sheet

This drawing is our property; it can't be reproduced or communicated without our written consent.