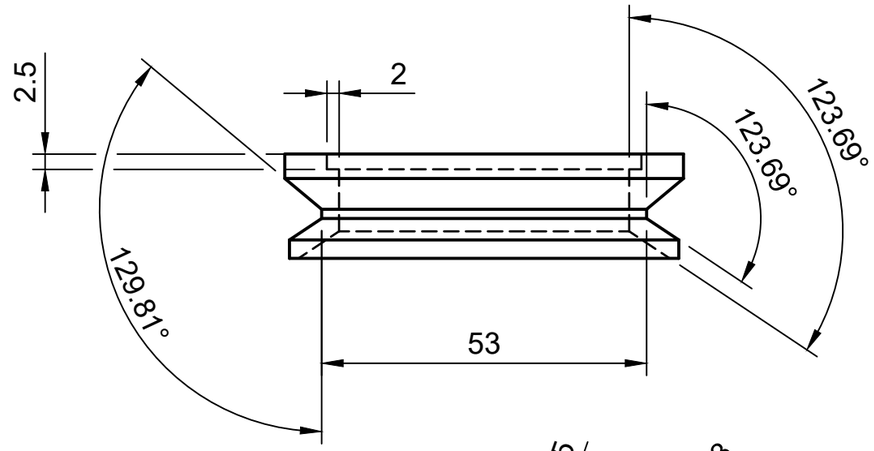

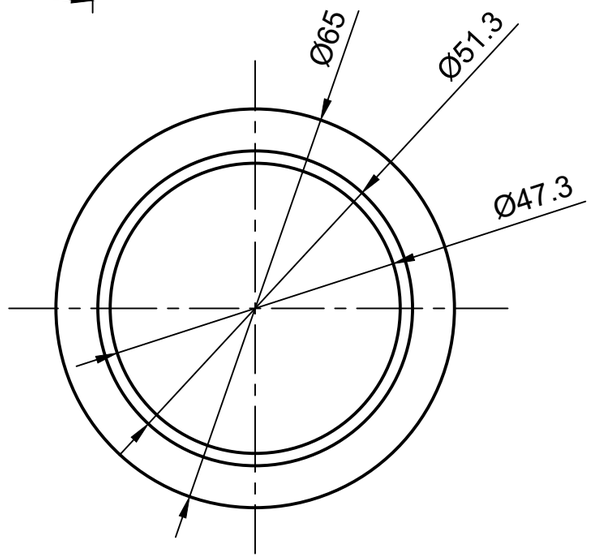

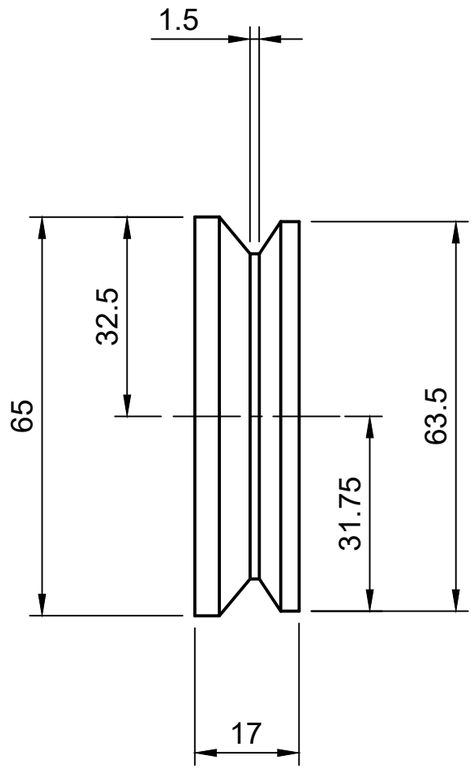

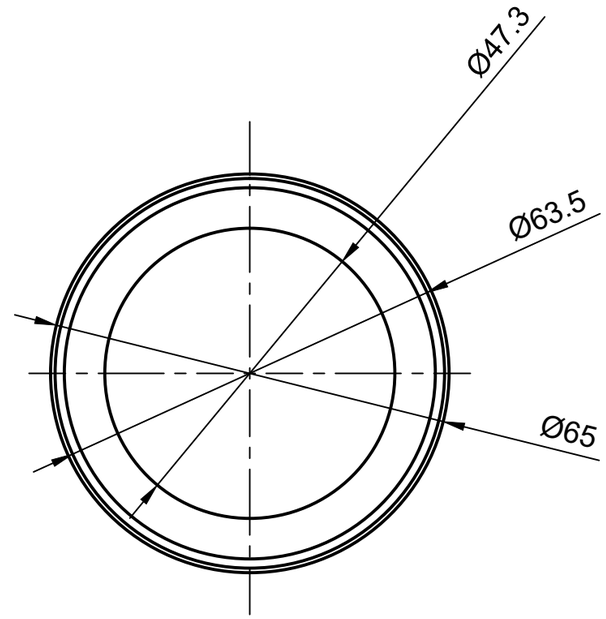

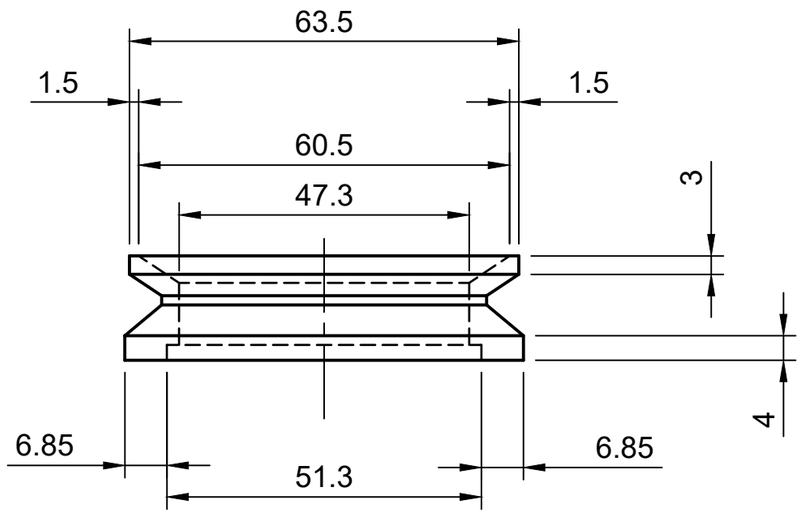

Dept.	Technical reference	Created by	Approved by
		Hnk Landre 07/04/2020	
		Document type	Document status
		Title Réducteur_vband_53_63.5	DWG No.
			Rev. / Date of issue / Sheet 1/1