RevNo	Revision note	Date	Signature	Checked

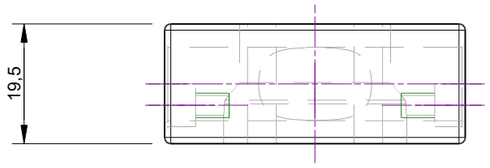

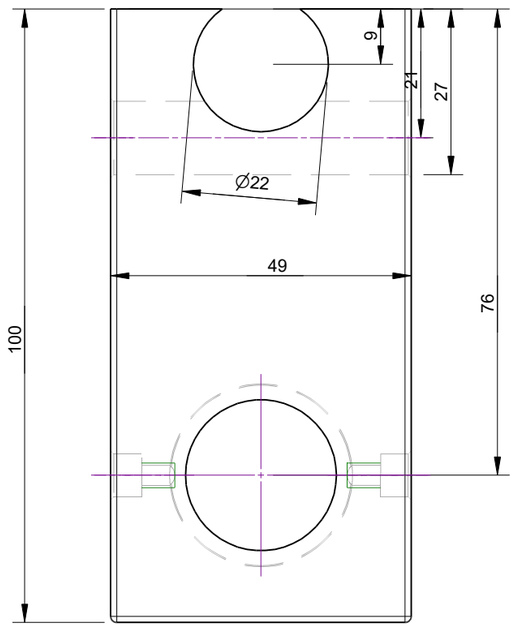

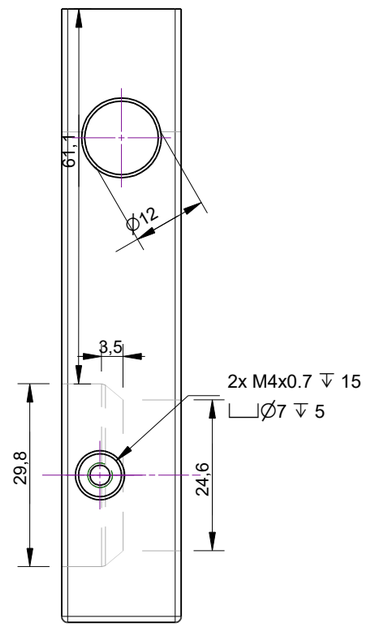

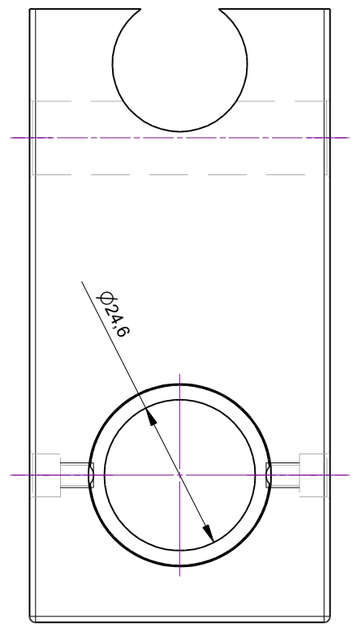

Itemref	Quantity	Title/Name, designation, material, dimension etc			Article No./Reference	
Drawn by		Checked by	Approved by - date	File name	Date	Scale 1:1
					Edition	Sheet 1 / 1