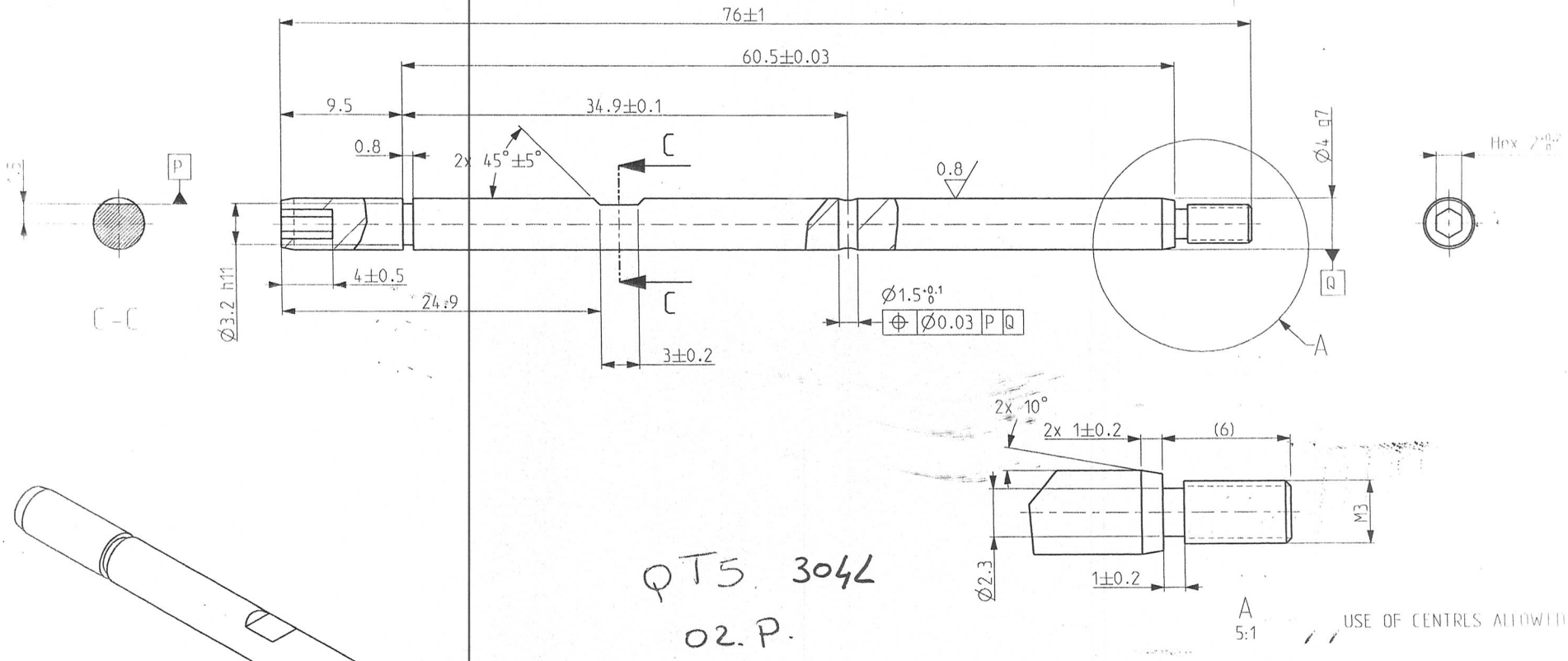

QT5 304L

02. P.

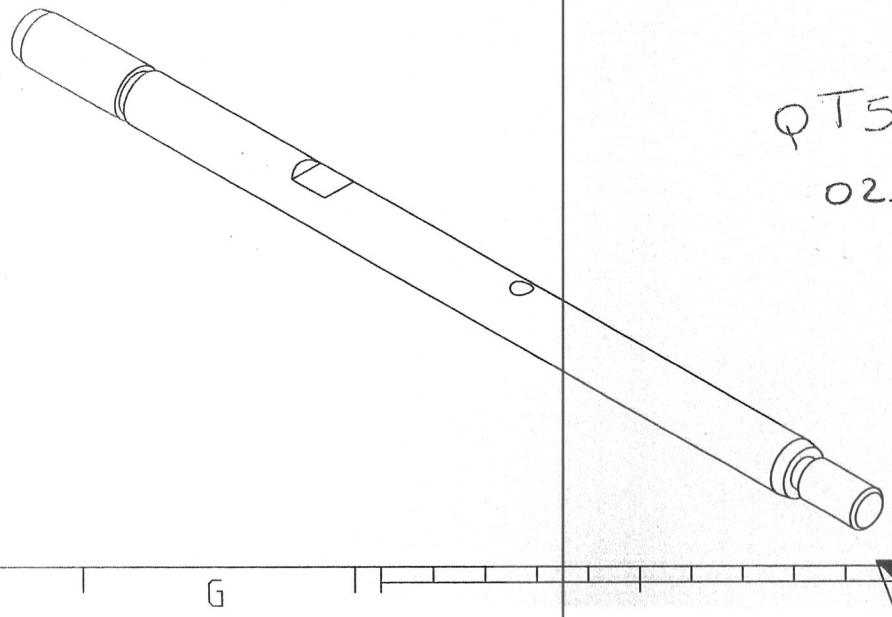

Cleaning/Rinsing/Drying/Packing according to 10-6 mbar vaccum

MATIERE / MATERIAL: 1.4305		ETAT DE SURFACE GENERAL (ISO 4287) / GENERAL QUALITY SURFACE (ISO 4287) Ra 1.6	TOLERANCES GENERALES / GENERAL TOLERANCES 2768 mH
TRAITEMENT/TREATMENT: -		FINITION / FINISHING : -	
PEINTURE / PAINT: -		COMPLEMENTS FABRICATION / MANUFACTURING COMPLEMENTARY -	
DESS / DRWN	Frencken	DATE / DATE	02/03/2016
VERIF / CHKD		DATE / DATE	
APPR / APPD		DATE / DATE	
1/1 FOLIO / SHEET		A3 FORMAT / SIZE	X Shaft
		3:1 ECHELLE / SCALE	1300023229 A

THIS DOCUMENT MAY NOT BE REPRODUCED OR USED BY OTHERS WITHOUT THE EXPRESS WRITTEN CONSENT