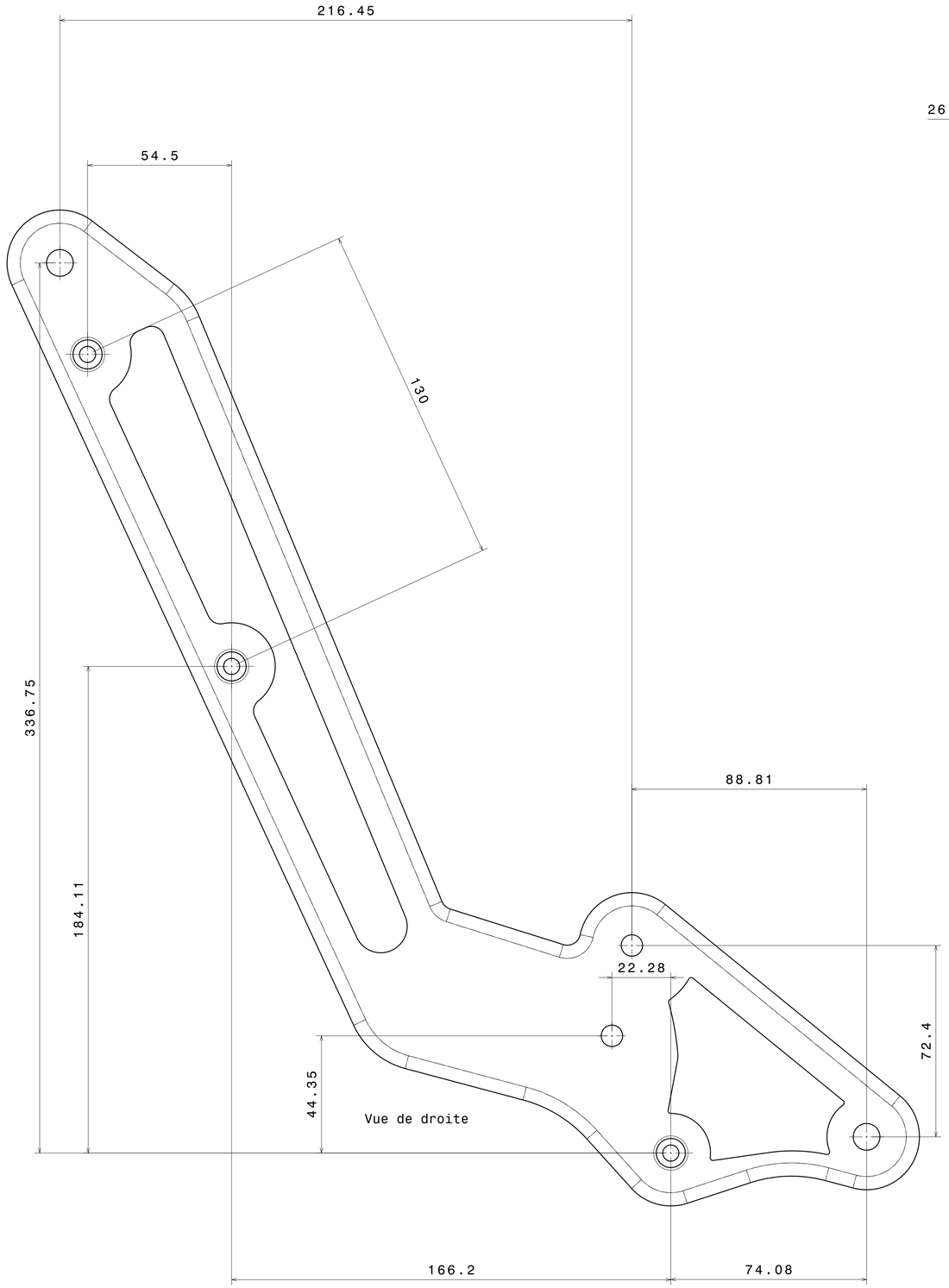

Vue de droite

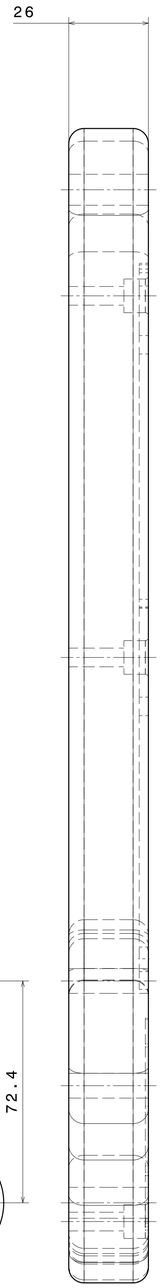

Vue de face
Echelle : 1:1

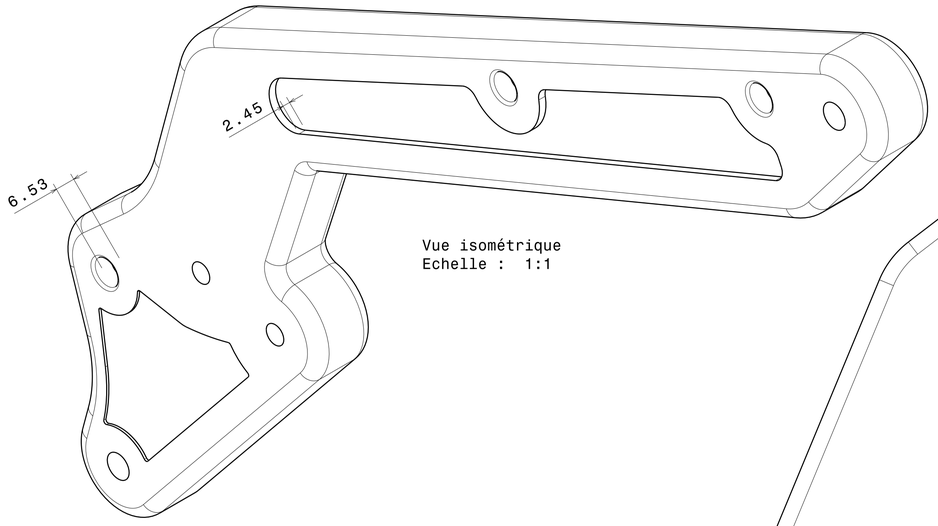

Vue isométrique
Echelle : 1:1

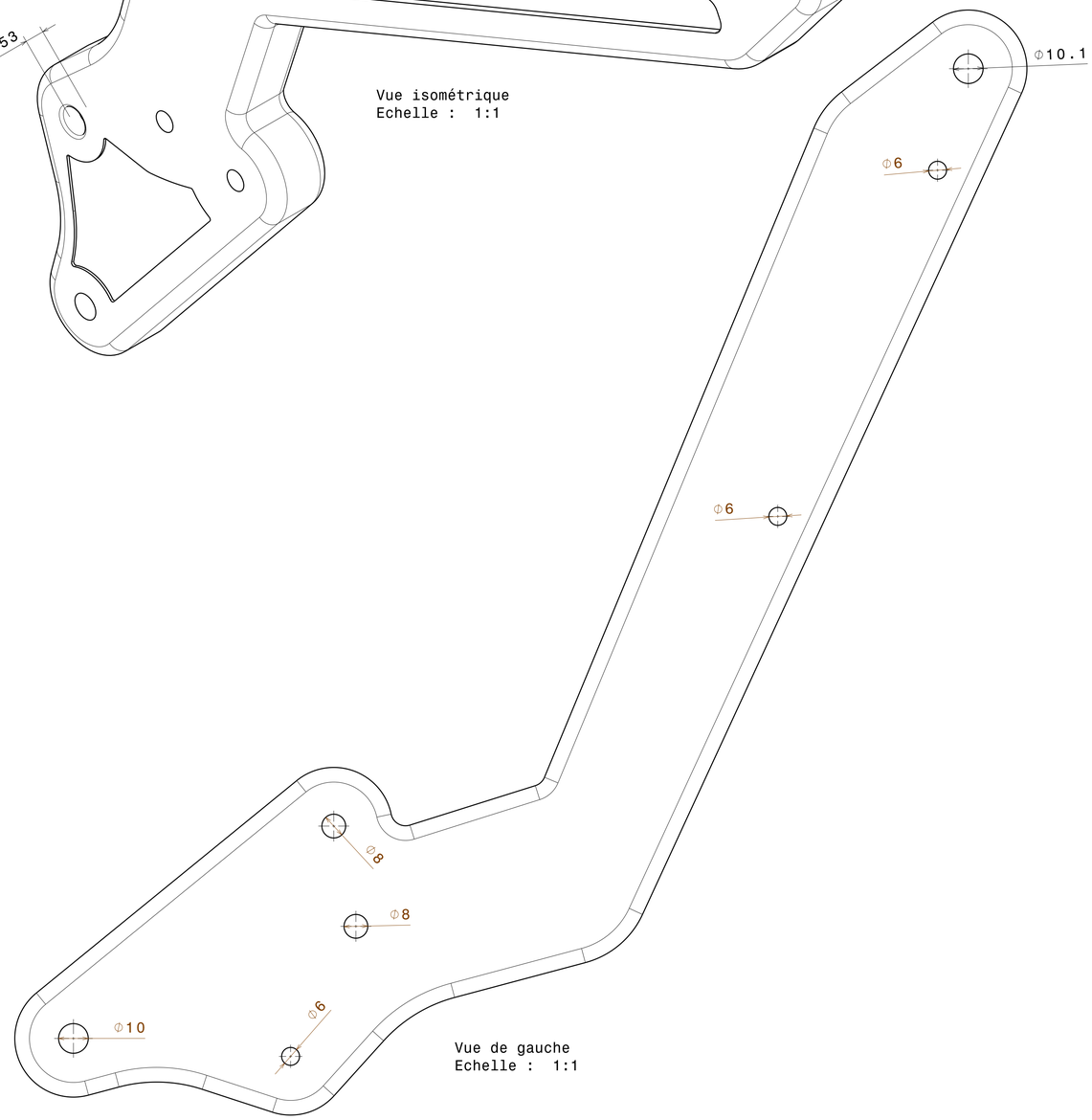

Vue de gauche
Echelle : 1:1

DESIGNED BY: CLAIRET Melvin, BRINJEAN Thibault	DATE: 19/09/2018	1ere Version	
SIZE A1	Projet K100		
SCALE 1:1	DRAWING NUMBER Bras Suspension	SHEET 1/1	

This drawing is our property; it can't be reproduced or communicated without our written agreement.