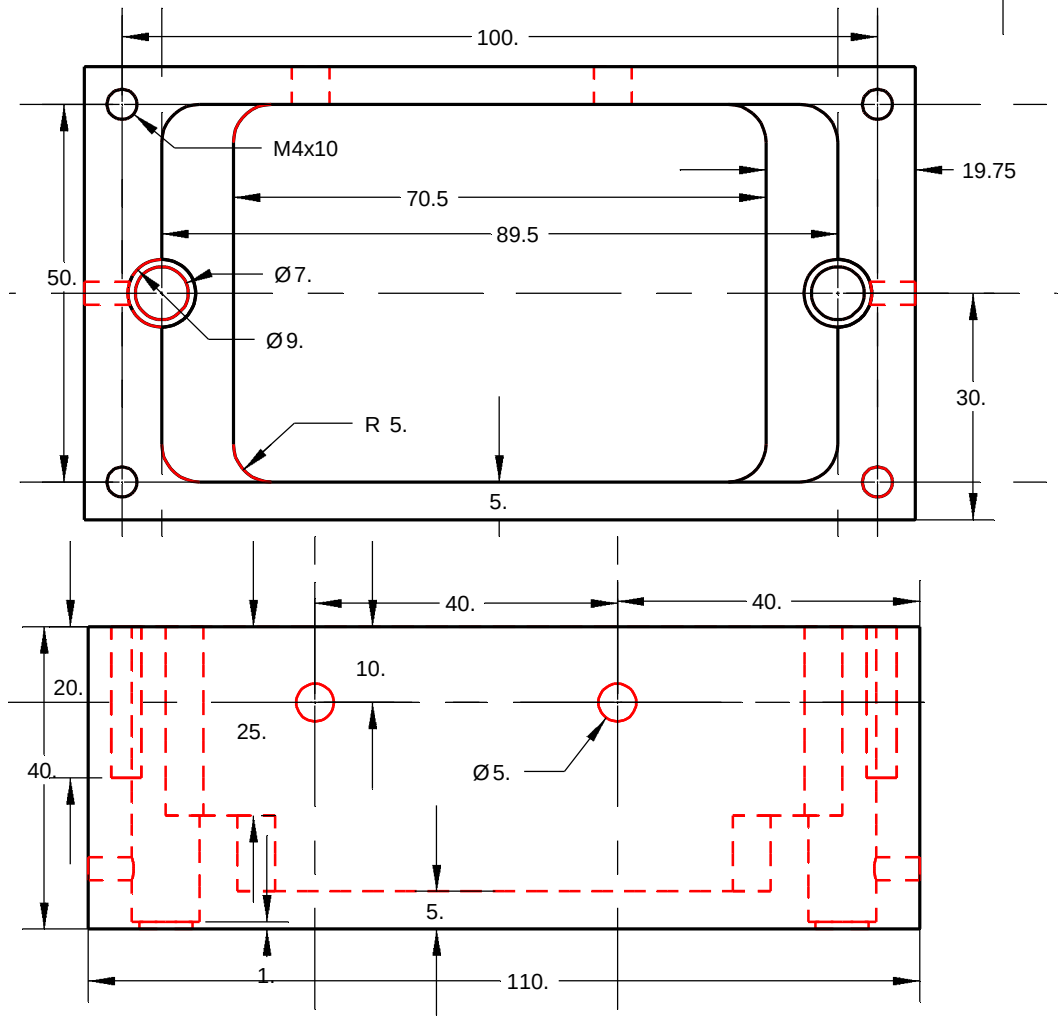

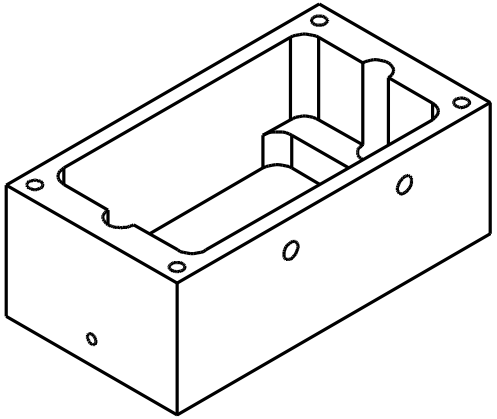

Unless Otherwise Specified: Dimensions in Inches Tolerances: Fractional ± Angular: Mach ± Bend ± Two Place Decimal ± Three Place Decimal ±	**Finish** --		**Debur and Break Sharp Edges**	**Do Not Scale Drawing**
				Action-NDT
	Name	**Date**	**Comments** CAD Generated Drawing Do Not Manually Update	**Visée Laser Boite** Aluminium AU4G
Drawn				
Checked				
ENG Appr.				
MFR Appr.				
QA			**Material** --	

Size	**Drawing No.**	**Rev**
A4	**0001**	**A**

Scale	**CAD File**	**Sheet**
1:1		**1 of 1**