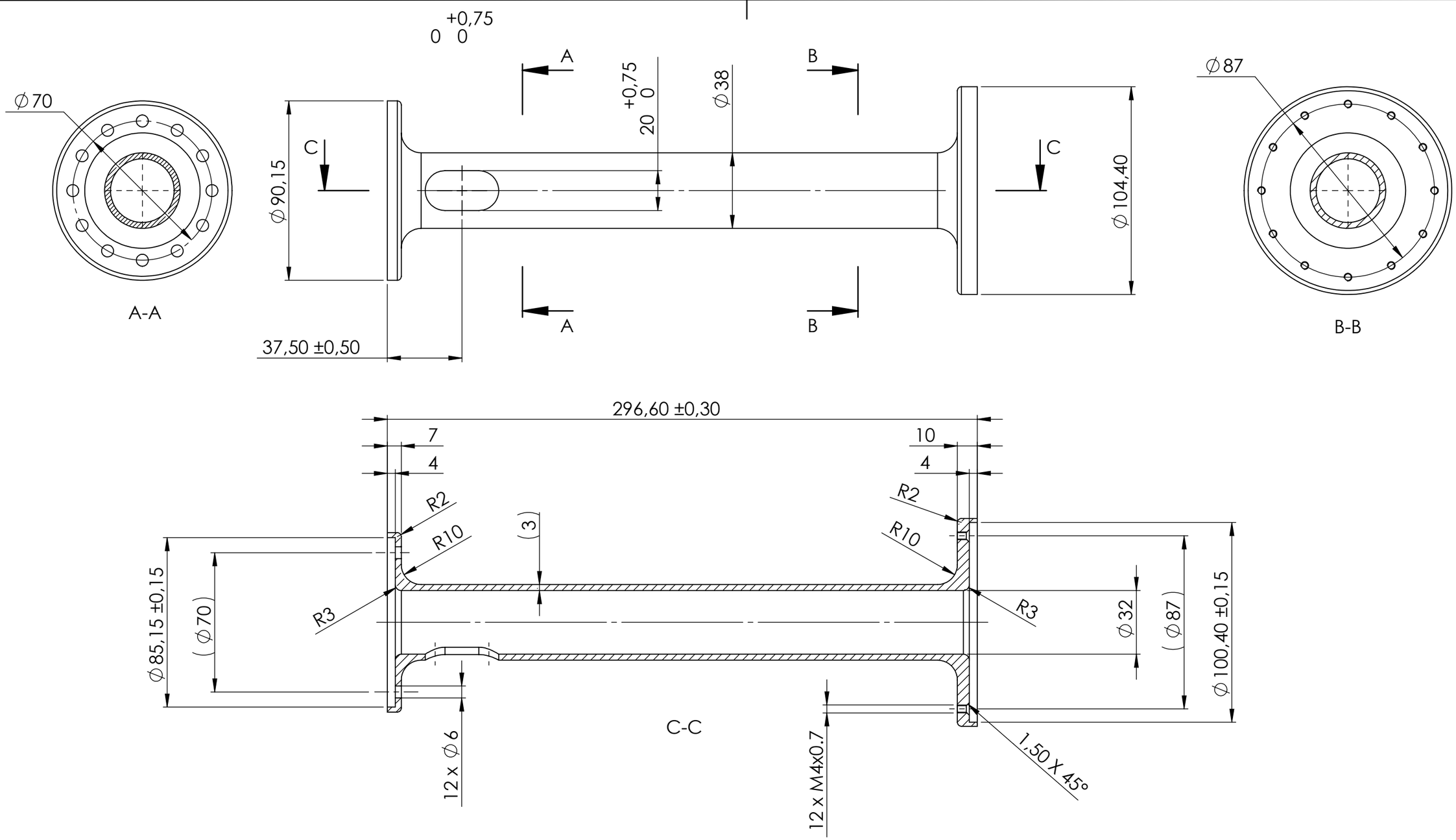

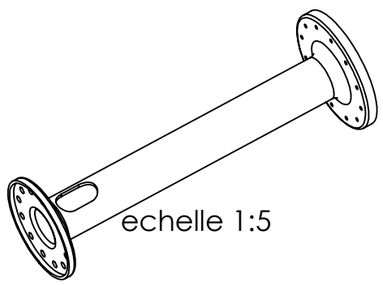

echelle 1:5

Tolérances générales : ± 0.20
Rayon d'usinage maxi : 0.30

This drawing is our property. It can't be reproduced or comunicated without our wrritten agreement.

kopadia

DESIGNED BY **Gaetan**	DATE 22/10/2018	DRAWING TITLE **Rod 5 - M100**	
CHECKED BY **Hervé**		SIZE **A3**	DRAWING NUMBER **2018021**
		SCALE 1:2	Material Acier S235 / SHEET 1/1