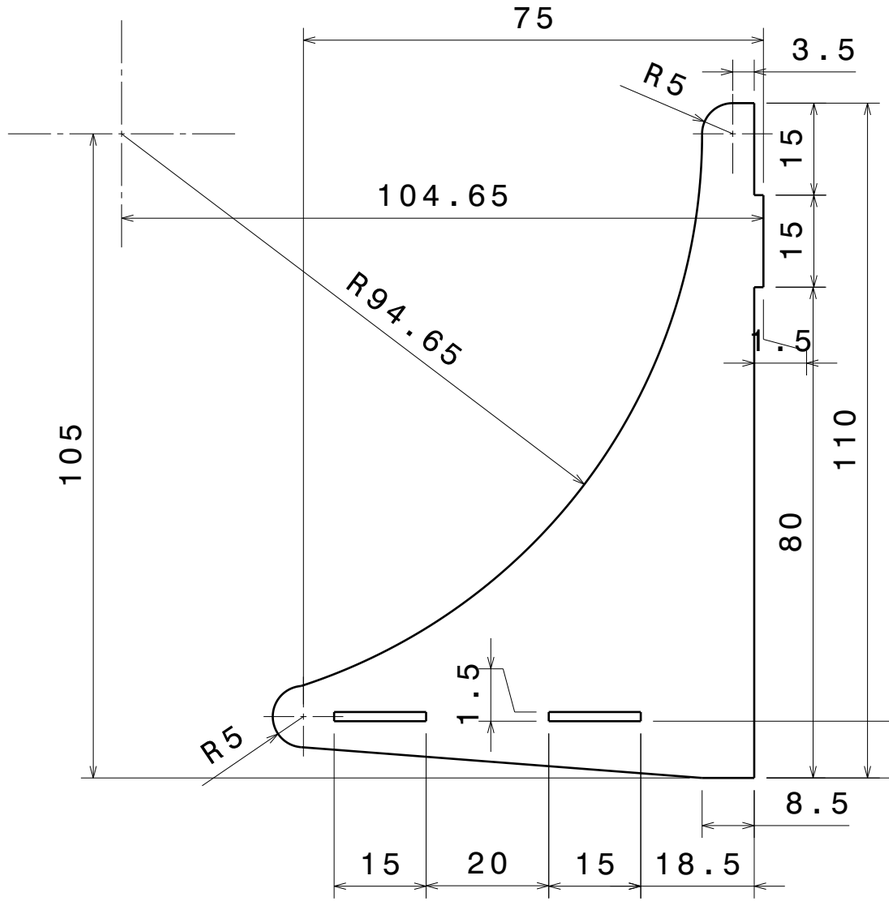

Vue de face
Echelle : 1:1

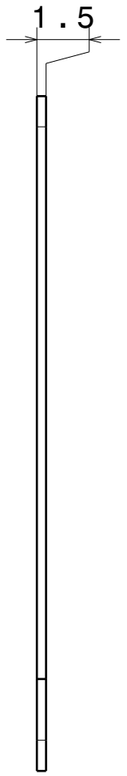

Vue de gauche
Echelle : 1:1

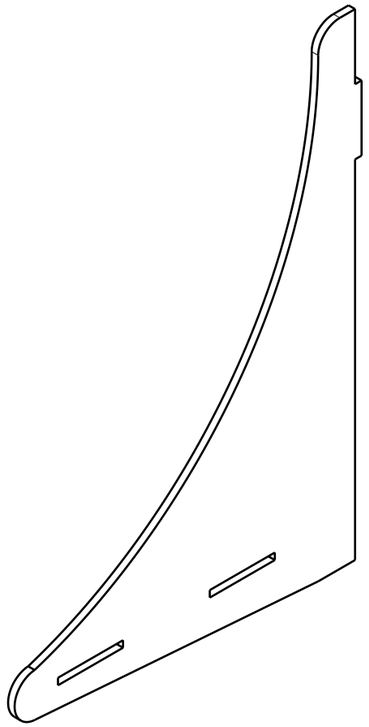

Vue isométrique
Echelle : 1:1

DESIGNED BY: JD	Support de pompe		
DATE: 05/06/2018			
CHECKED BY: XXX			
DATE: XXX			
SIZE A3	Face		
SCALE 1:1	WEIGHT (kg) 0.039	Version 2.0	SHEET 1/1

This drawing is our property; it can't be reproduced or communicated without our written agreement.

I	_
H	_
G	_
F	_
E	_
D	_
C	_
B	Ep. 1.5mm
A	Création