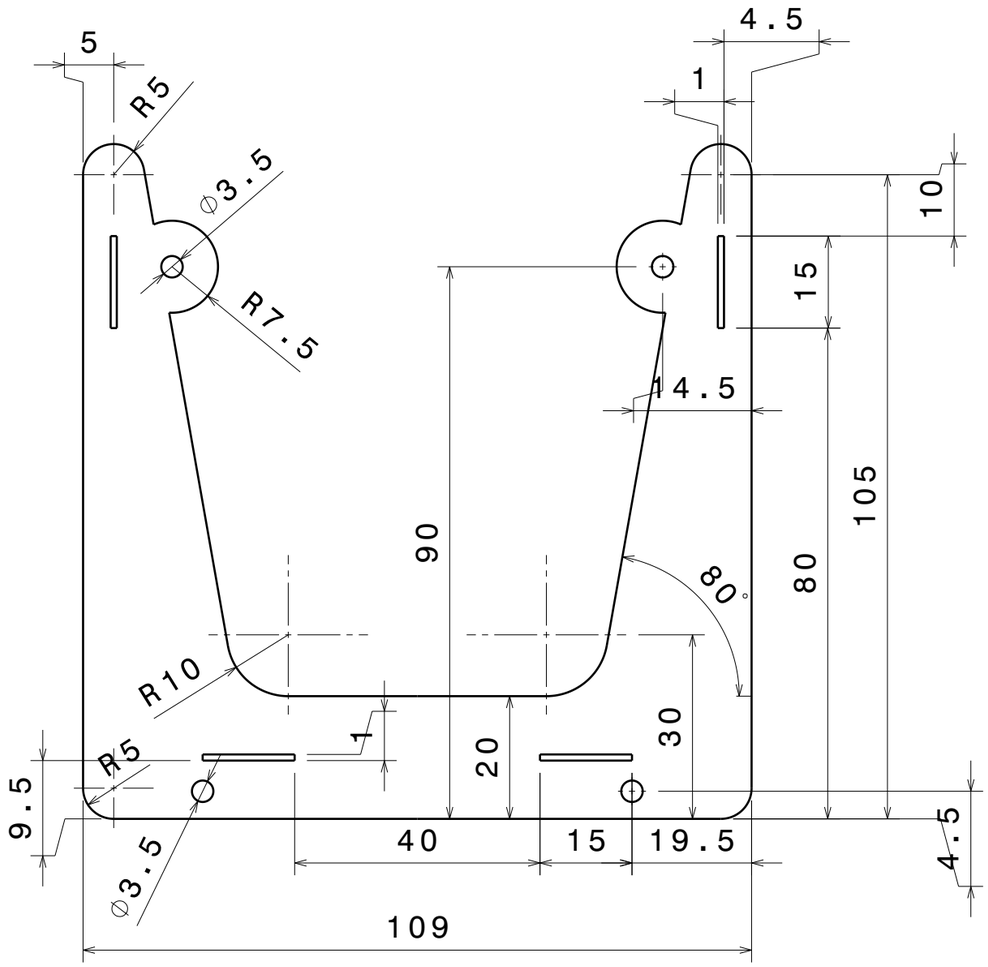

Vue de face
Echelle : 1:1

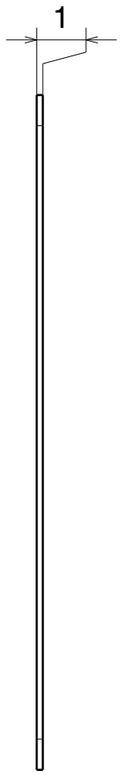

Vue de gauche
Echelle : 1:1

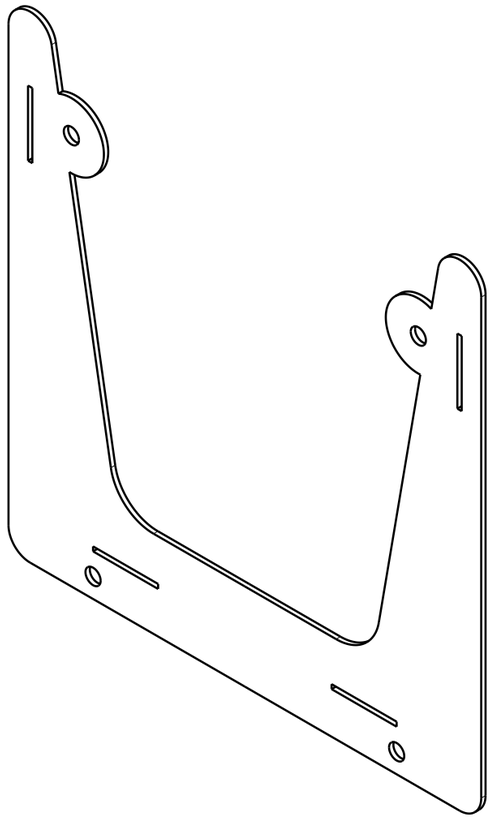

Vue isométrique
Echelle : 1:1

DESIGNED BY: JD.CHARLES DATE: 03/06/2018	Support de pompe	I	_
CHECKED BY: XXX DATE: XXX		H	_
		G	_
		F	_
SIZE A3	Fond	E	_
		D	_
		C	_
SCALE 1:1 / WEIGHT (kg) 0.042	DRAWING NUMBER XXX / SHEET 1/1	B	_
		A	Création

This drawing is our property; it can't be reproduced or communicated without our written agreement.