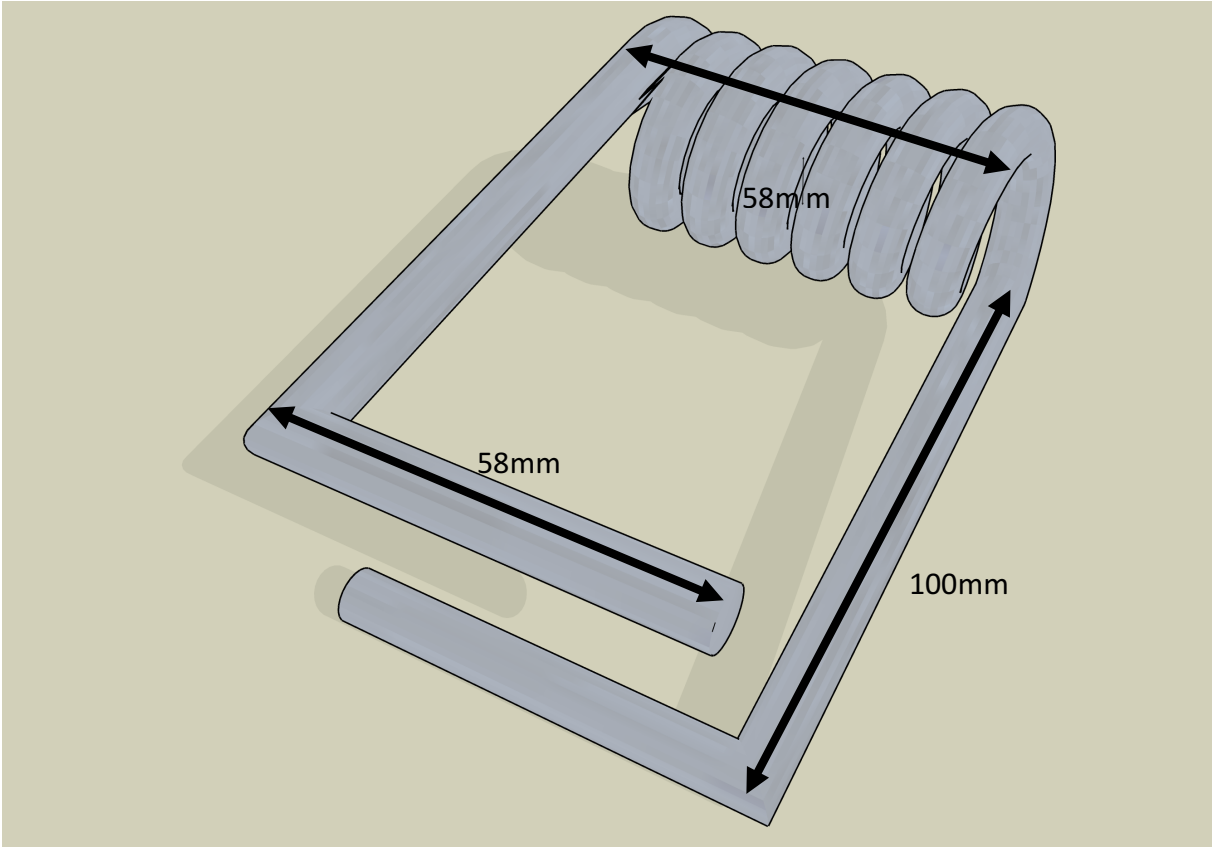
58mm
58mm
100mm

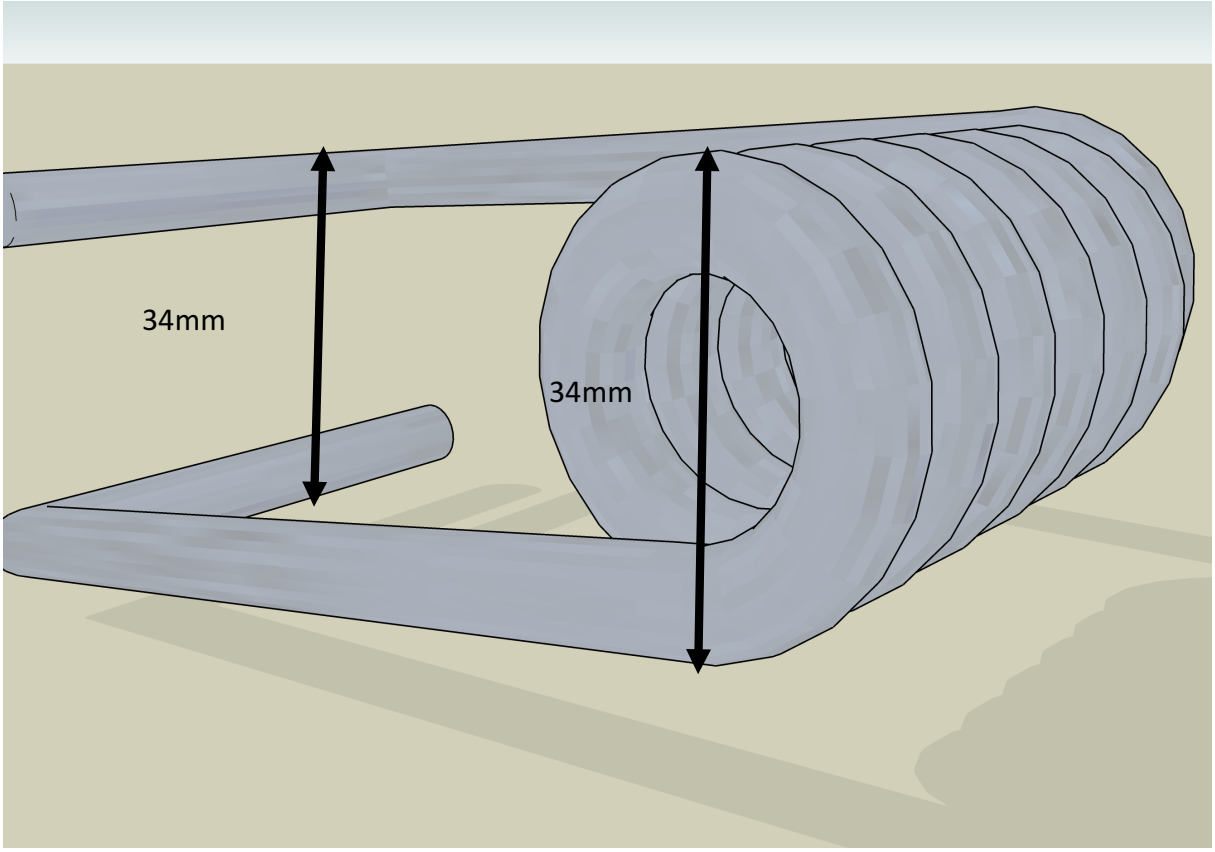
34mm
34mm