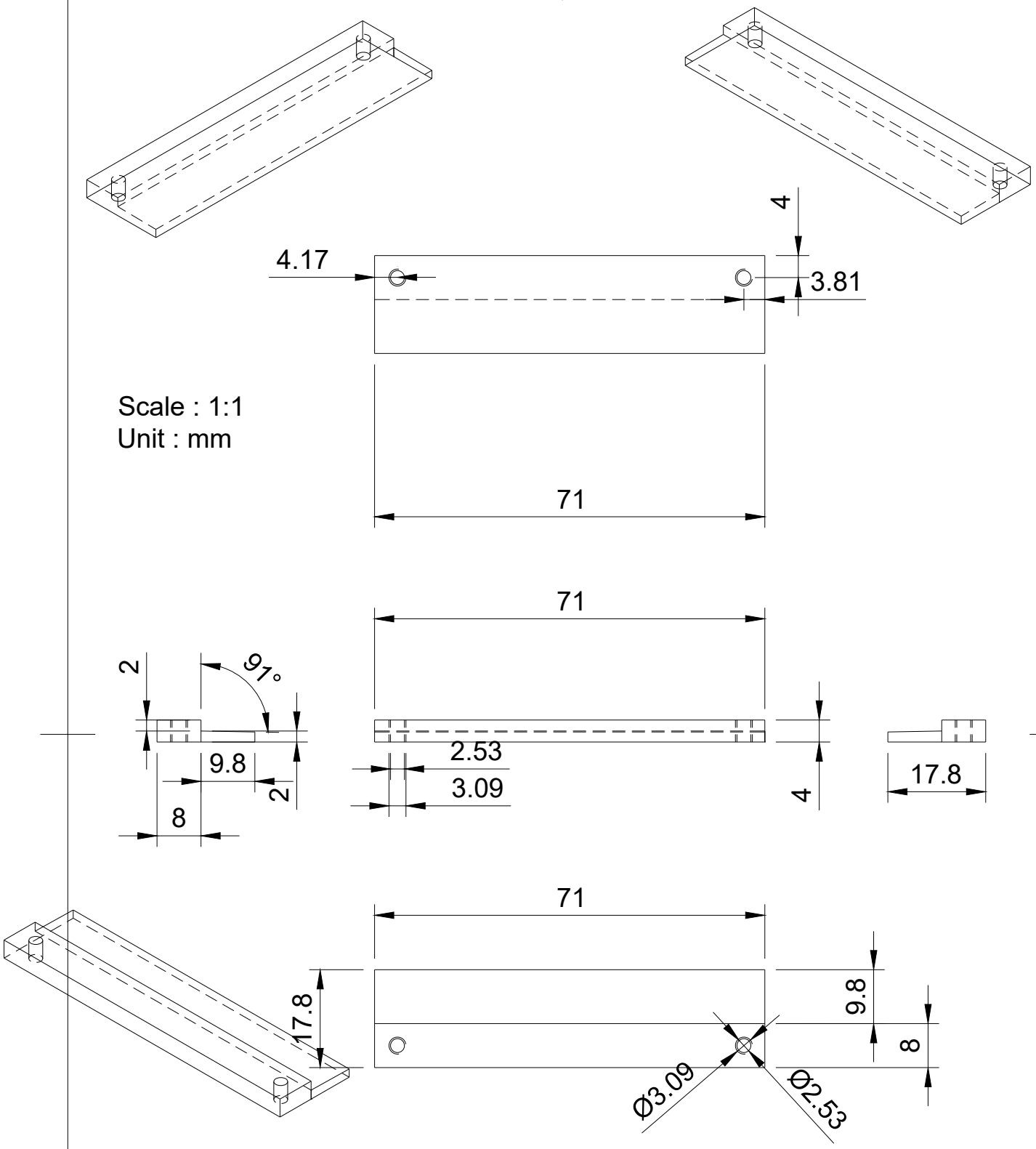

Dept.	Technical reference	Created by Valentin Brisson 19/12/2018	Approved by	
LOMA innovation		Document type	Document status	
		Title Pince inf 1	DWG No.	
			Rev. / Date of issue	Sheet 1/1