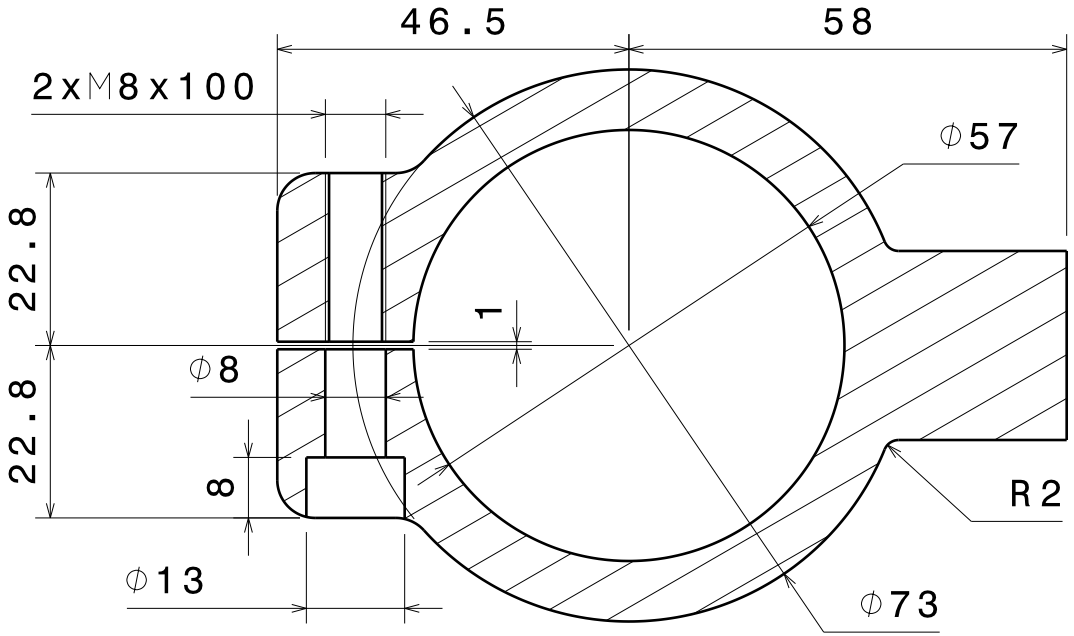
46.5
58
2xM8x100
φ57
22.8
1
φ8
22.8
8
R2
φ13
φ73

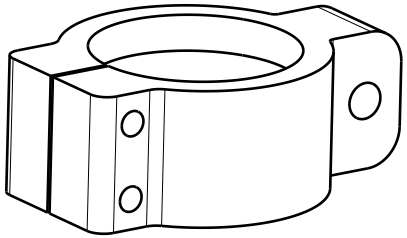

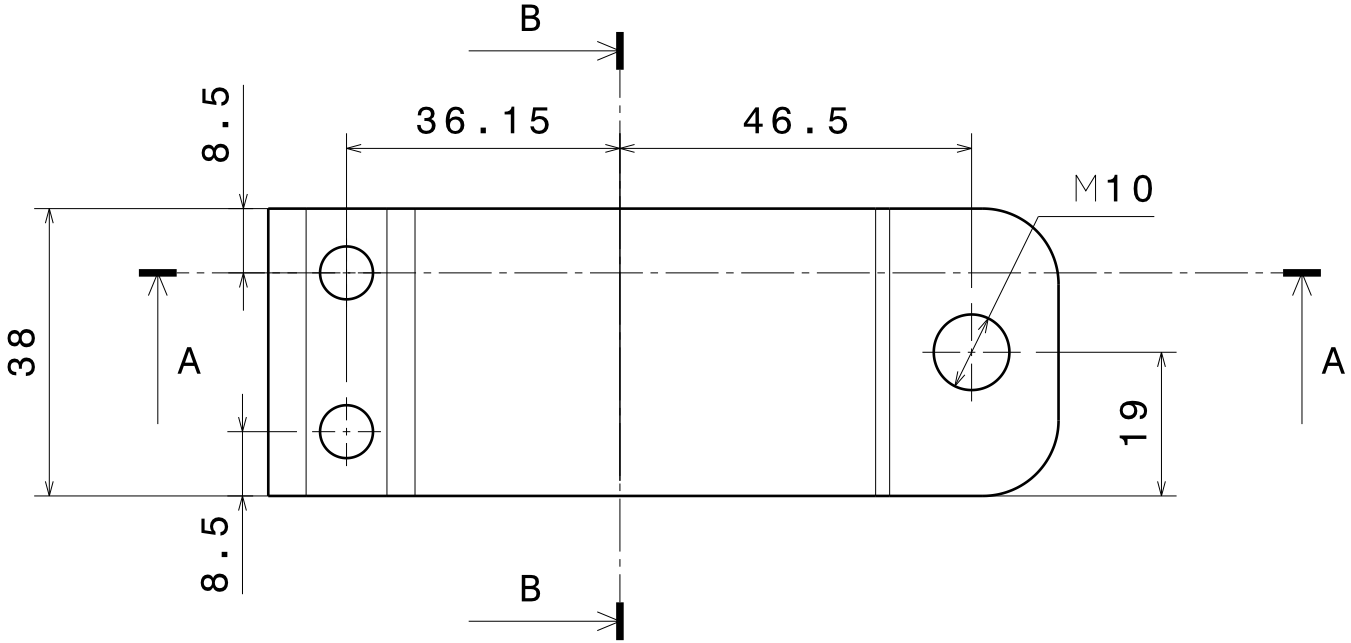
B
8.5
36.15
46.5
M10
38
A
A
19
8.5
B

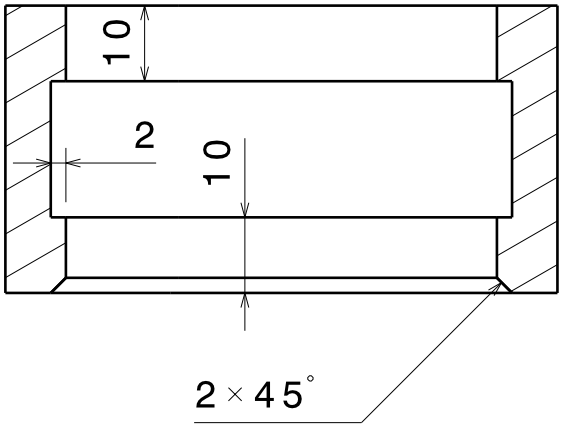
10
2
10
2×45°